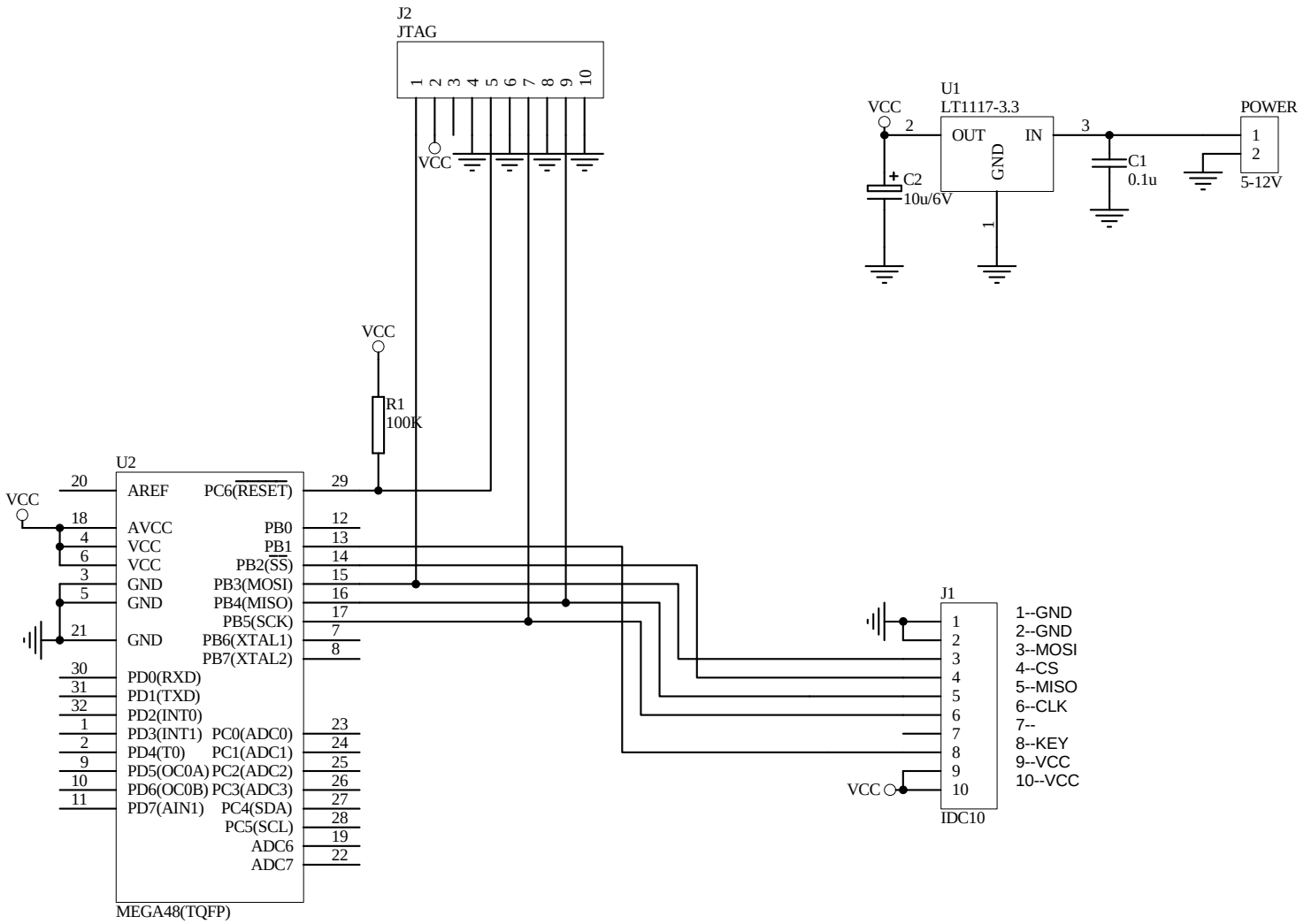

Size	FCSM No.	DWG No.	Rev
A			

Scale		Sheet
		0 of 0