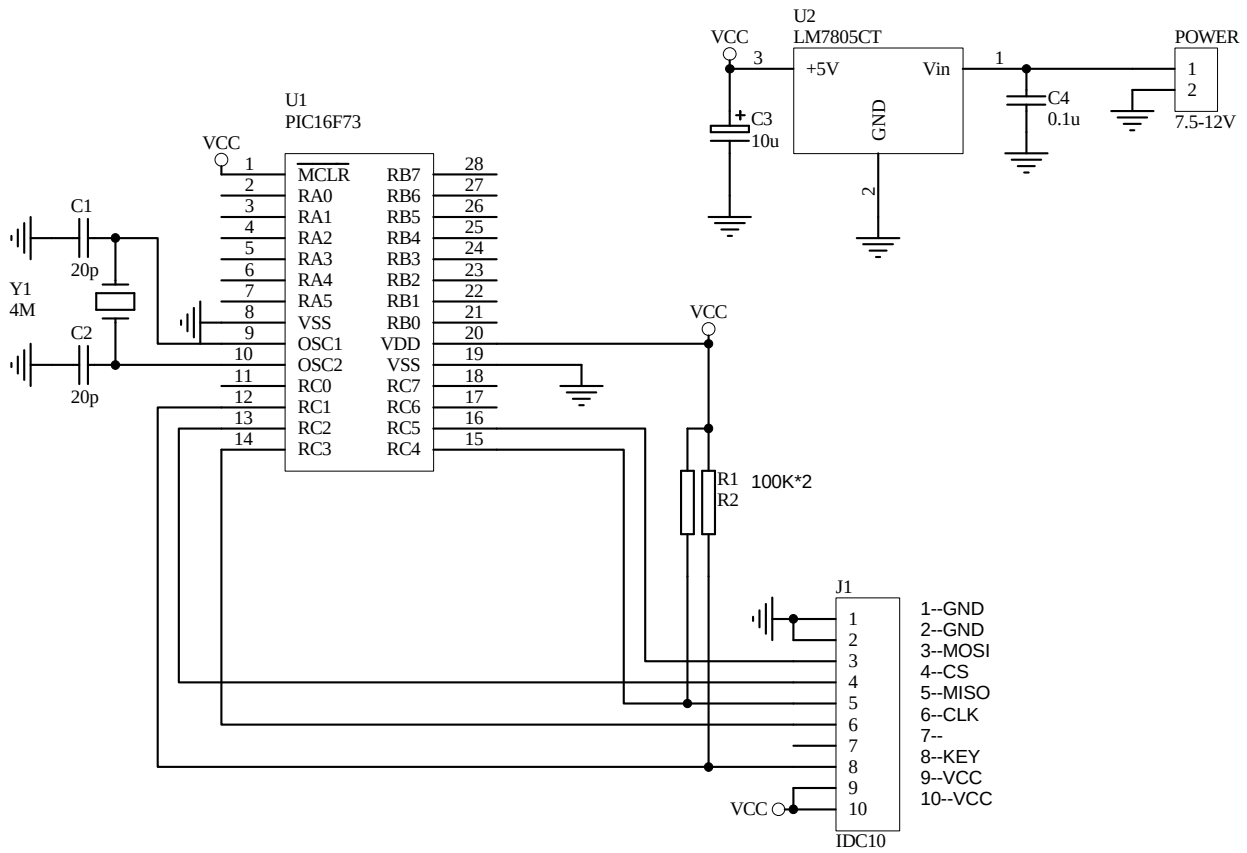

Size A	FCSM No.	DWG No.	Rev
Scale		Sheet 0 of 0	